Modular manifolds EASY·LOCK

EASY·LOCK manifolds are designed to be connected in a practical and easy way: being manufactured so to obtain thread matching, EASY·LOCK manifolds connected to each other result in an aligned sealed assembly, with no need for sealants. Manifolds are nickel-plated, but only on the outside surface: this makes them compliant with international standards on drinking water systems. EASY·LOCK can be supplied either with no shut-off valves or with valves, the latter version with vertical or 30°-knobs. All models are available with 2, 3 or 4 outtakes (G 3/4" EK, M24, G 1/2" female, G 1/2" male or G 1/2" flat-seal male threads) and G 3/4" or G 1" headers.

Manifolds series CI 400N are available with green, red or blue knobs.
Manifolds series CI 350N have white knobs featuring the possibility to mount indicators to show the application of the manifold (hot/cold water) and of the specific outtake (shower, bathtub, water closet, basin, washing machine, sink or bidet).

TECHNICAL FEATURES

Max static operating pressure: 10 bar
Max operating temperature:

- CS 200N series: 120 °C
- CI 400N and CI 350N series: 100 °C

Fluid: drinking water; water or water-glycol mixtures
Flow rate coefficient for the single way:

- CS 200N series, G 3/4": 5.55
- CS 200N series, G 1": 6.62
- CI 400N series, G 3/4": 2.51
- CI 400N series, G 1": 3.26
- CI 350N series, G 3/4": 2.51
- CI 350N series, G 1": 2.92

Interaxis: 40 mm

MATERIALS

Manifold body: CW617N
Knobs (CI 400N and CI 350N series): ABS
O-rings and sealing elements: peroxide EPDM
Blue/red plate and printed indicator insert (CI 350N series): aluminium
Indicator languages (CI 350N series): Italian and English

DIMENSIONS

Legend

EK: G 3/4" EUROKONUS thread
M: male thread
F: female thread
FS: male flat-seal thread

CS 200N. Plain modular manifolds EASY·LOCK

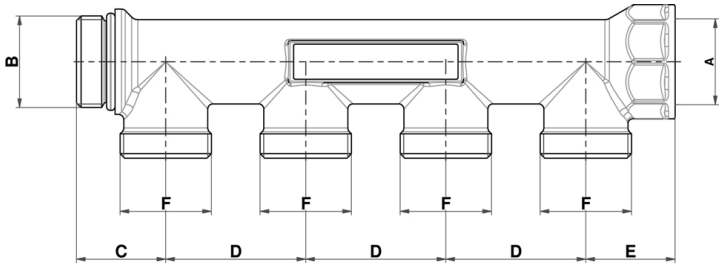

CS 200N - Dimensions and codes

WAYS	COD	SIZE	A	B	C	D	E	F
2	501705N	3/4”×EK	3/4”	3/4”	26.5	40	25.5	3/4” EK
	501704N	3/4”×M24						M24×1.5
	501701N	3/4”×1/2”F						1/2”F
	506340N	3/4”×1/2”M						1/2”M
	506344N	3/4”×1/2”FS						1/2”FS
	501685N	1”×EK	1”	1”				3/4” EK
	501684N	1”×M24						M24×1.5
	501681N	1”×1/2”F						1/2”F
	506348N	1”×1/2”M						1/2”M
	506352N	1”×1/2”FS						1/2”FS
3	501707N	3/4”×EK	3/4”	3/4”				3/4” EK
	501706N	3/4”×M24						M24×1.5
	501702N	3/4”×1/2”F						1/2”F
	506341N	3/4”×1/2”M						1/2”M
	506345N	3/4”×1/2”FS						1/2”FS
	501687N	1”×EK	1”	1”				3/4” EK
	501686N	1”×M24						M24×1.5
	501682N	1”×1/2”F						1/2”F
	506349N	1”×1/2”M						1/2”M
	506353N	1”×1/2”FS						1/2”FS
4	501709N	3/4”×EK	3/4”	3/4”				3/4” EK
	501708N	3/4”×M24						M24×1.5
	501703N	3/4”×1/2”F						1/2”F
	506342N	3/4”×1/2”M						1/2”M
	506346N	3/4”×1/2”FS						1/2”FS
	501689N	1”×EK	1”	1”				3/4” EK
	501688N	1”×M24						M24×1.5
	501683N	1”×1/2”F						1/2”F
	506350N	1”×1/2”M						1/2”M
	506354N	1”×1/2”FS						1/2”FS

CI 400N. EASY·LOCK manifolds with adjustment valves and blue, red or green knobs

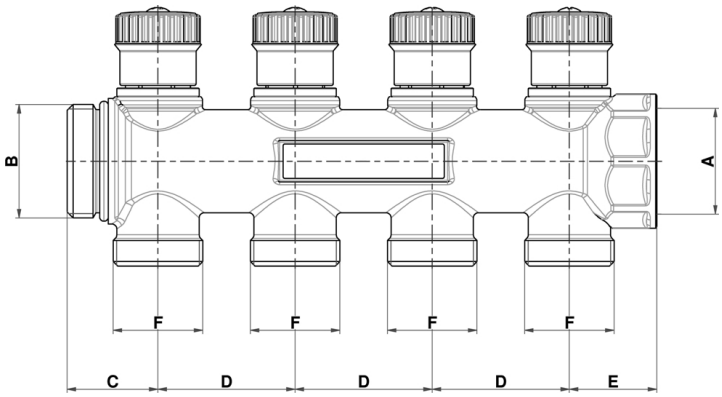

CI 400N - Dimensions and codes

WAYS	Knob colour BLUE COD	RED COD	GREEN COD	SIZE	A	B	C	D	E	F
2	506300NB	506300NR	506300N	3/4”×EK	3/4”	3/4”	25.5	40	25.5	3/4” EK
	506304NB	506304NR	506304N	3/4”×M24						M24×1.5
	506308NB	506308NR	506308N	3/4”×1/2”F						1/2”F
	506312NB	506312NR	506312N	3/4”×1/2”M						1/2”M
	506316NB	506316NR	506316N	3/4”×1/2”FS						1/2”FS
	506320NB	506320NR	506320N	1”×EK	1”	1”				3/4” EK
	506324NB	506324NR	506324N	1”×M24						M24×1.5
	506328NB	506328NR	506328N	1”×1/2”F						1/2”F
	506332NB	506332NR	506332N	1”×1/2”M						1/2”M
	506336NB	506336NR	506336N	1”×1/2”FS						1/2”FS
3	506301NB	506301NR	506301N	3/4”×EK	3/4”	3/4”				3/4” EK
	506305NB	506305NR	506305N	3/4”×M24						M24×1.5
	506309NB	506309NR	506309N	3/4”×1/2”F						1/2”F
	506313NB	506313NR	506313N	3/4”×1/2”M						1/2”M
	506317NB	506317NR	506317N	3/4”×1/2”FS						1/2”FS
	506321NB	506321NR	506321N	1”×EK	1”	1”				3/4” EK
	506325NB	506325NR	506325N	1”×M24						M24×1.5
	506329NB	506329NR	506329N	1”×1/2”F						1/2”F
	506333NB	506333NR	506333N	1”×1/2”M						1/2”M
	506337NB	506337NR	506337N	1”×1/2”FS						1/2”FS
4	506302NB	506302NR	506302N	3/4”×EK	3/4”	3/4”				3/4” EK
	506306NB	506306NR	506306N	3/4”×M24						M24×1.5
	506310NB	506310NR	506310N	3/4”×1/2”F						1/2”F
	506314NB	506314NR	506314N	3/4”×1/2”M						1/2”M
	506318NB	506318NR	506318N	3/4”×1/2”FS						1/2”FS
	506322NB	506322NR	506322N	1”×EK	1”	1”				3/4” EK
	506326NB	506326NR	506326N	1”×M24						M24×1.5
	506330NB	506330NR	506330N	1”×1/2”F						1/2”F
	506334NB	506334NR	506334N	1”×1/2”M						1/2”M
	506338NB	506338NR	506338N	1”×1/2”FS						1/2”FS

CS 350N. Modular manifolds EASY·LOCK manifolds with adjustment valves and 30°-inclined knobs

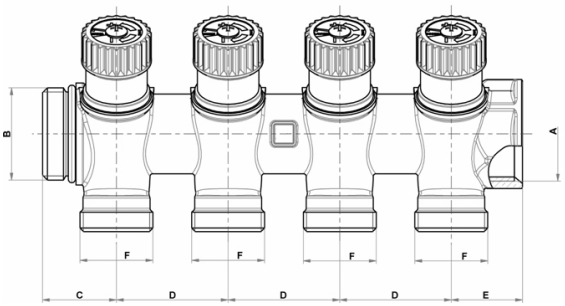

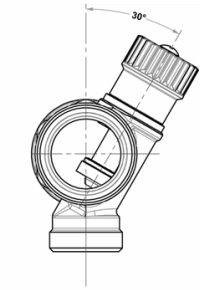

CI 350N - Dimensions and codes

WAYS	COD	SIZE	A	B	C	D	E	F
2	506800N	3/4”×EK	3/4”	3/4”	25.5	40	25.5	3/4” EK
	506812N	3/4”×M24						M24×1.5
	506803N	3/4”×1/2”F						1/2”F
	506806N	3/4”×1/2”M						1/2”M
	506809N	3/4”×1/2”FS						1/2”FS
	506815N	1”×EK	1”	1”				3/4” EK
	506827N	1”×M24						M24×1.5
	506818N	1”×1/2”F						1/2”F
	506821N	1”×1/2”M						1/2”M
	506824N	1”×1/2”FS						1/2”FS
3	506801N	3/4”×EK	3/4”	3/4”				3/4” EK
	506813N	3/4”×M24						M24×1.5
	506804N	3/4”×1/2”F						1/2”F
	506807N	3/4”×1/2”M						1/2”M
	506810N	3/4”×1/2”FS						1/2”FS
	506816N	1”×EK	1”	1”				3/4” EK
	506828N	1”×M24						M24×1.5
	506819N	1”×1/2”F						1/2”F
	506822N	1”×1/2”M						1/2”M
	506825N	1”×1/2”FS						1/2”FS
4	506802N	3/4”×EK	3/4”	3/4”				3/4” EK
	506814N	3/4”×M24						M24×1.5
	506805N	3/4”×1/2”F						1/2”F
	506808N	3/4”×1/2”M						1/2”M
	506811N	3/4”×1/2”FS						1/2”FS
	506817N	1”×EK	1”	1”				3/4” EK
	506829N	1”×M24						M24×1.5
	506820N	1”×1/2”F						1/2”F
	506823N	1”×1/2”M						1/2”M
	506826N	1”×1/2”FS						1/2”FS

HYDRAULIC FEATURES

CS 200N

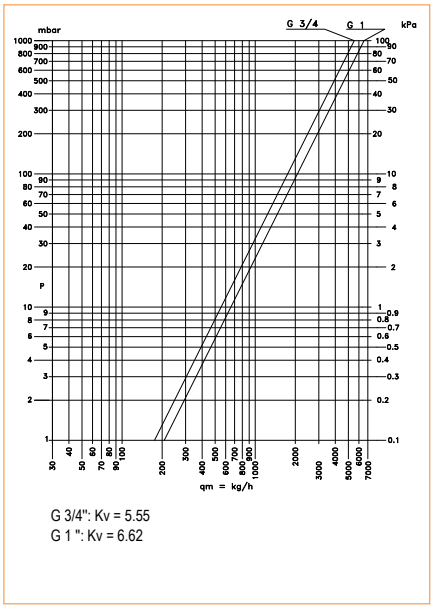

G 3/4": Kv = 5.55
G 1 ": Kv = 6.62

CI 400N (G 3/4")

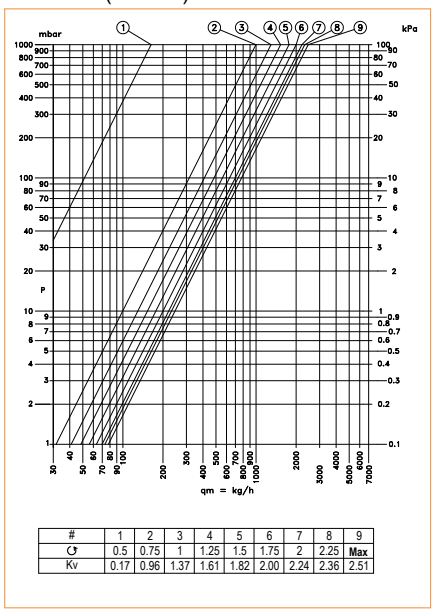

#	1	2	3	4	5	6	7	8	9
↺	0.5	0.75	1	1.25	1.5	1.75	2	2.25	Max
Kv	0.17	0.96	1.37	1.61	1.82	2.00	2.24	2.36	2.51

CI 400N (G 1")

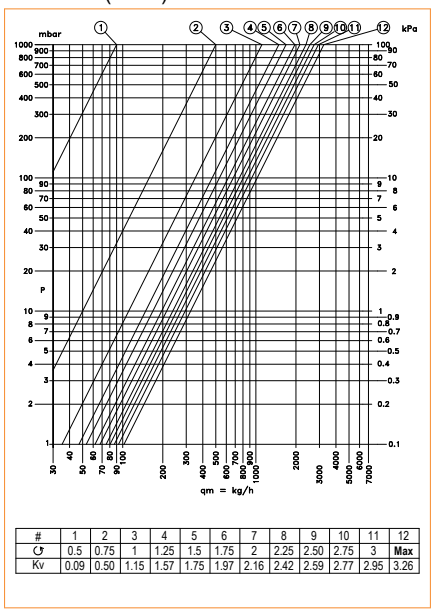

#	1	2	3	4	5	6	7	8	9	10	11	12
↺	0.5	0.75	1	1.25	1.5	1.75	2	2.25	2.50	2.75	3	Max
Kv	0.09	0.50	1.15	1.57	1.75	1.97	2.16	2.42	2.59	2.77	2.95	3.26

CI 350N (G 3/4")

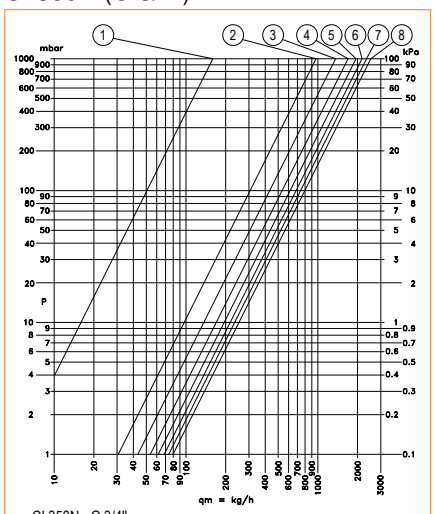

CI 350N - G 3/4"

#	1	2	3	4	5	6	7	8
↺	0.25	0.5	0.75	1	1.25	1.5	1.75	Max
Kv	0.16	0.97	1.38	1.70	1.96	2.16	2.33	2.51

CI 350N (G 1")

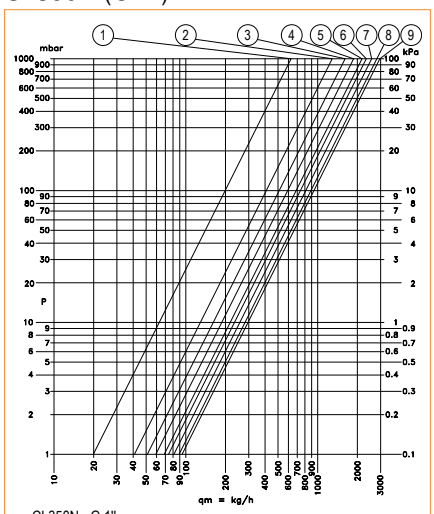

CI 350N - G 1"

#	1	2	3	4	5	6	7	8	9
↺	0.25	0.5	0.75	1	1.25	1.5	2	2.25	Max
Kv	0.62	1.28	1.60	1.88	2.19	2.33	2.55	2.77	2.92

↺ = number of turns from closure position
Max = completely open position

OPERATING INSTRUCTIONS

Connecting EASY·LOCK manifolds to each other

EASY·LOCK manifolds can be connected to each other without the need for additional sealants. Headers threads are machined so that the outtakes of coupled manifolds connected to each other are always aligned.

Outtakes connections

EASY·LOCK manifolds are available with the following types of outtake threads:

- G 3/4” EK
- M24×1.5
- 1/2” female
- 1/2” male
- flat-seal 1/2” male

The coupling between EASY·LOCK and pipe must be performed through the most suitable fittings to the type of tubing and to its characteristic dimensions (outside diameter, OD, and its wall thickness s if required).

Connection examples

Example 1: EASY·LOCK CS 200 series, G 3/4” EK connections

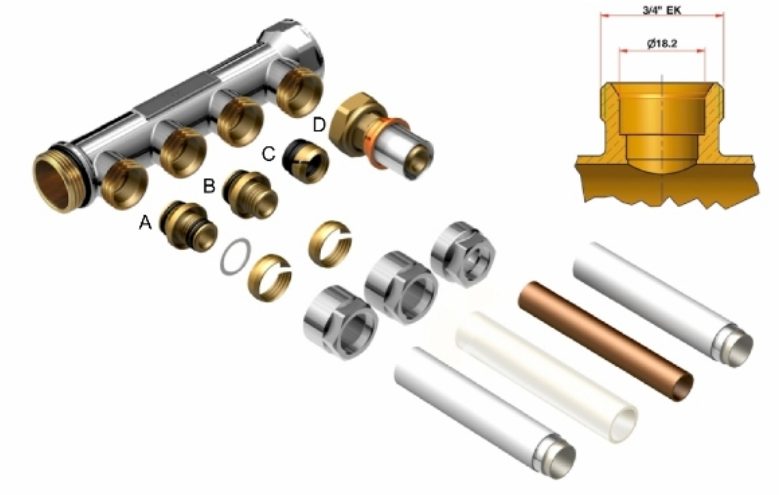

A. Screw fitting for multilayer pipe EK×OD/s (art. TA 4420)

B. Screw fitting for polyethylene pipe EK×OD/s (art. TP 4410)

C. Screw fitting for copper or carbon-steel pipe EK×OD (art. TR 4430)

D. Press fitting for multilayer pipe with swivel nut EK×OD/s (art. MP 5705)

Example 2: EASY·LOCK CI 350 series, G 1/2” F connections

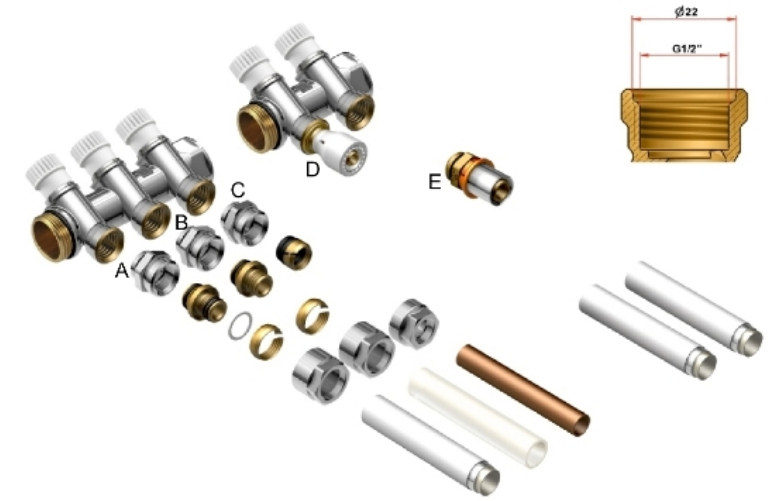

A. Screw fitting for multilayer pipe 1/2”M×OD/s (art. RA 761N)

B. Screw fitting for polyethylene pipe 1/2”M×OD/s (art. RP 731N)

C. Screw fitting for copper pipe 1/2”M×OD (art. RR 781N)

D. Quick fitting IVAR·PUSH for multilayer pipe 1/2”M×OD/s (art. BP 5609)

E. Press fitting for multilayer pipe 1/2”M×OD/s (art. MP 5609)

Installation of indicator plate (CI 350N series only)

Manifolds with 30°-inclined knobs (CI 350N series) are equipped with white knobs that can be customised by indicators. Such indicators can be used to show if water flowing through the manifold is hot or cold, and the type of element corresponding to each outtake.

Fig. 1: Indicator mounting.

In order to mount the indicator correctly, choose the side of the plate that should be visible from the outside (usually the red one for hot-water manifold and the blue one for cold-water manifold). The plate features a window showing the element connected to the corresponding outtake: to this purpose, place the printed indicator insert under the red/blue plate so that the correct element name can be seen from the plate window, as shown in Fig.1.
For instance, if the outtake connected to the sink is to be indicated on a hot-water manifold, it is recommended that a configuration as in Fig.2 is chosen.

Fig. 2: Example: how to indicate an outtake connected to a sink on a hot-water manifold.

Once the indicator assembly has been put in place, fasten it to the white knob by means of the included crosshead screw.

Manifold housing (Fig.3)

Modular manifolds can be housed within plastic box art. AC 852, available in different sizes even equipped with plastering protection. Manifolds can be fastened through kit AC 853, consisting of spacing supports and zip ties.

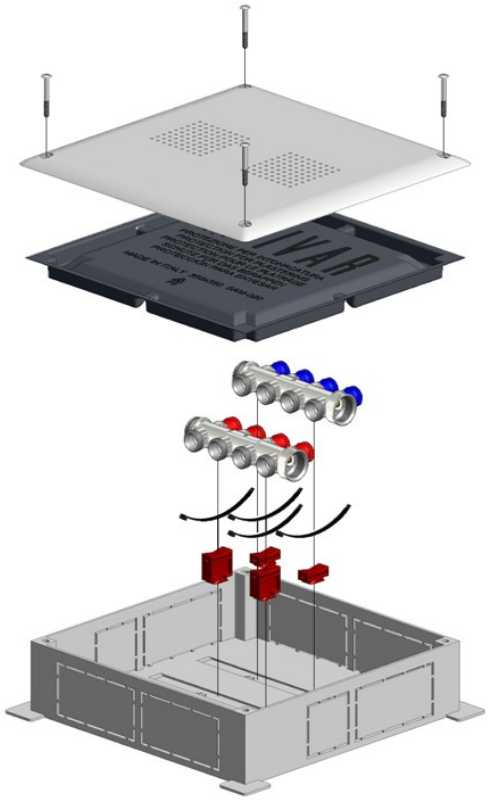

Fig. 3: Manifold housing within wall-mounted box.

NOTES

EASY·LOCK manifolds are also available with pre-mounted push-fittings IVAR·PUSH for 16/2 multilayer pipe:

- plain modular manifolds: art. CS 201N
- modular manifolds with adjustment valves and green, red or blue knobs: art. CI 402N
- modular manifolds with adjustment valves and 30°-inclined white knobs: art. CI 351N

CERTIFICATIONS

EASY·LOCK manifolds obtained French “Attestation de Conformité Sanitaire” (ACS) for usage in drinking water applications.

ACCESSORIES

TA 4420. EK
screw-fitting for
multilayer pipe.

TP 4410. EK
screw-fitting for
polyethylene pipe.

TR 4430. EK
screw-fitting for copper
or carbon-steel pipe.

MP 5705. EK
pressfitting with swivel
nut for multilayer pipe.

BP 5705. EK pushfitting
with swivel nut for
multilayer pipe.

RA 761N. 1/2”M
screw-fitting for
multilayer pipe.

RP 731N. 1/2”M
screw-fitting for
polyethylene pipe.

RR 781N. 1/2”M
screw-fitting for copper
or carbon-steel pipe.

MP 5609. 1/2”M
soft-seal press-fitting for
multilayer pipe.

BP 5609. 1/2”M
soft-seal push-fitting for
multilayer pipe.

AC 852. Plastic box for modular manifolds, with or without plastering protection.

AC 853. Modular manifolds fastening kit for AC 852 box.

I.V.A.R. S.p.A.
Via IV Novembre 181
25080 Prevalle (BS)
Tel. +39 030 68028
Fax +39 030 6801329
www.ivar.eu - info@ivar.eu

I.V.A.R. S.p.A. reserves the right to make enhancements and changes to products and relative documentation at any time without prior notice. All rights reserved. Reproduction, even partial, is forbidden without prior permission by the copyright owner.